Wood Joints

Research each of the joints below and fill in their correct names. Then use your research to answer all of the questions.

Q. What would you use to hold the two pieces of wood together?

A. _____

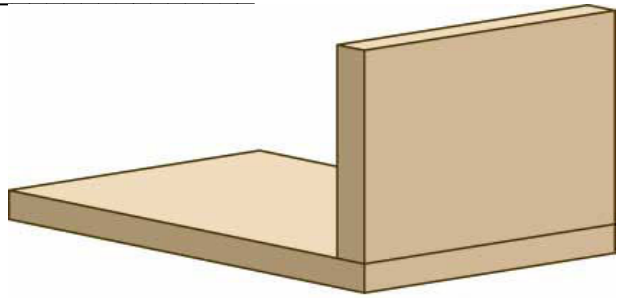

_____ JOINT

HALF- _____ JOINT

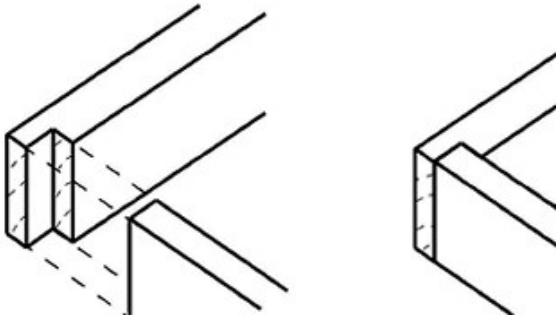

Q. Why do you think this is called a half - _____ joint?

A. _____

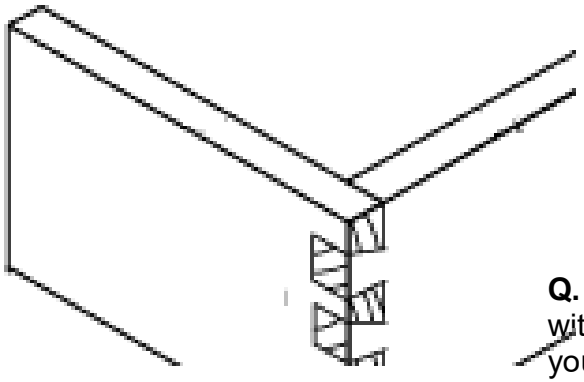

Q. On what object within the home would you find this type of joint?

A. _____

_____ JOINT

Q. At what angle do the two pieces meet? **A.** _____

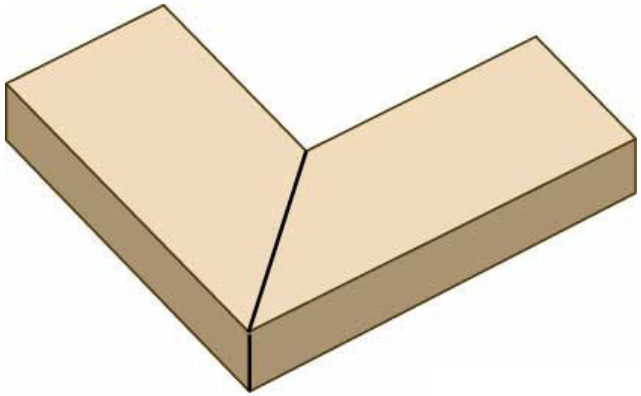

_____ JOINT

Q. Which of the four joints do you think is the strongest and why? **A.** _____