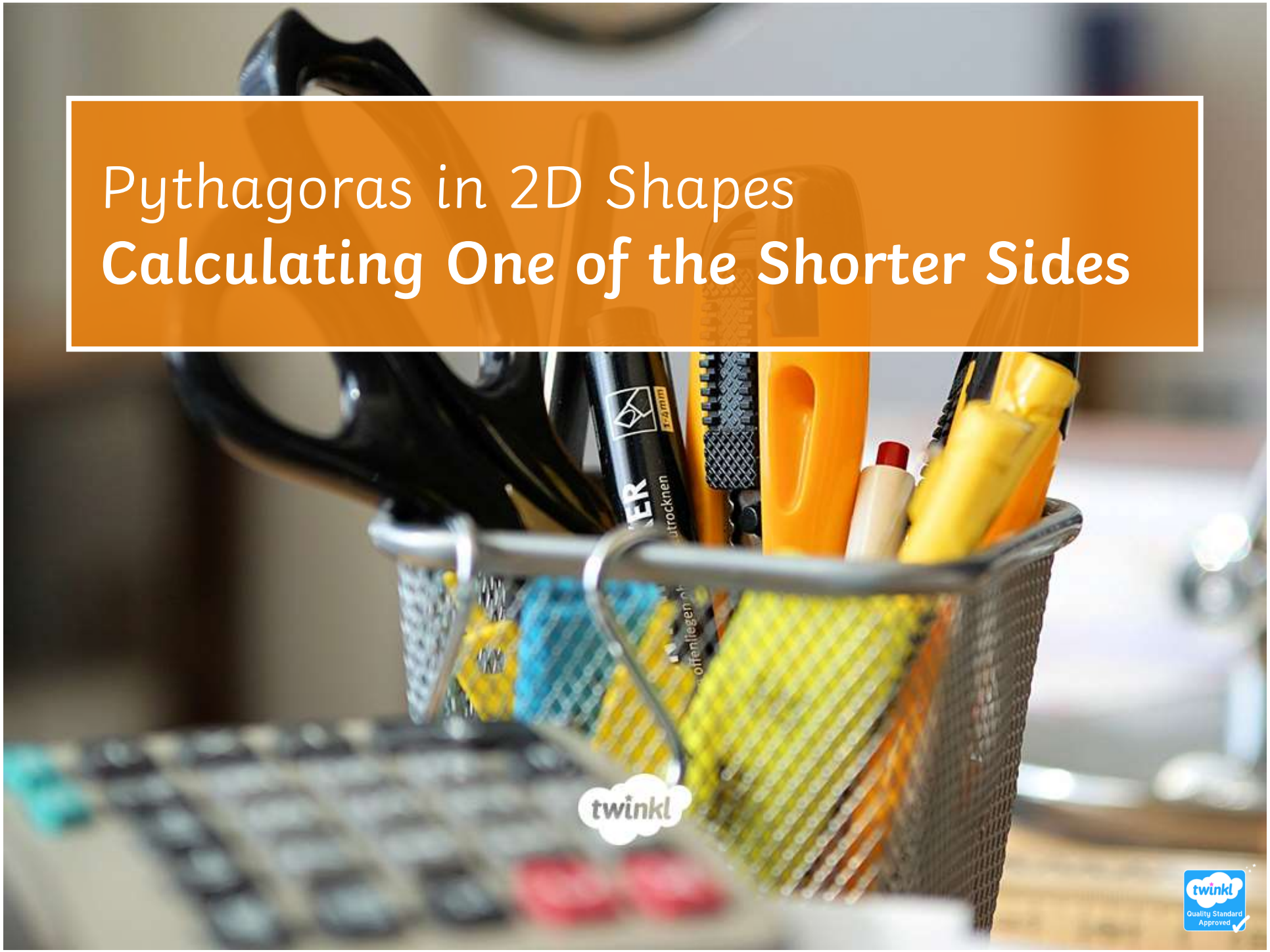

Pythagoras in 2D Shapes
Calculating One of the Shorter Sides

Learning Objective

- To apply Pythagoras' theorem to calculate one of the shorter sides in a right-angled triangle.

Success Criteria

- To recall Pythagoras' theorem.
- To identify the hypotenuse of a triangle.
- To use Pythagoras' theorem to find the length of a shorter side.

twinkl.com

Think Square

Miss Root thinks of a number then squares it.

Mr Hypotenuse thinks of a different number and squares it.

Mrs Isosceles realises that her number squared is equal to the other two square numbers added together.

Find a possible solution to the numbers they were thinking of.

Recap

What is the formula for Pythagoras' theorem?

twinkl.com

Recap

Calculate the length c. Round your answer to 1 decimal place.

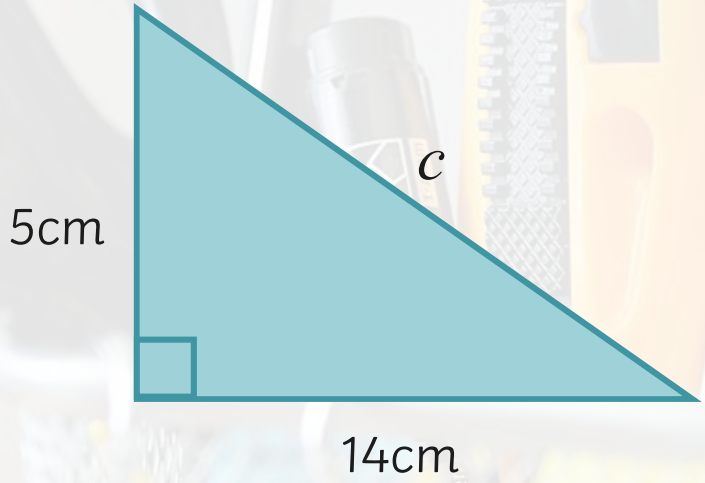

Answer:

$5^2 + 14^2$

$25 + 196 = 221$

$\sqrt{221} = 14.86606875$

$c = 14.9\text{cm}$

twinkl.com

Pythagoras' Theorem

$$a^2 + b^2 = c^2$$

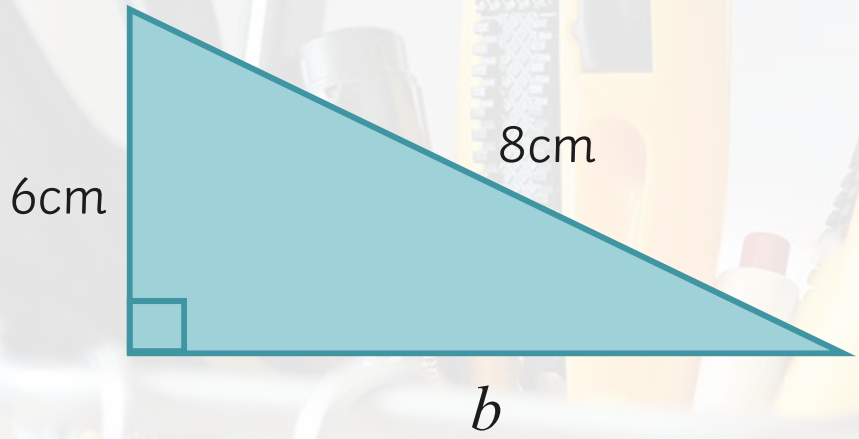

Pause for Thought:
What do you think we could do to calculate the length b?

By rearranging the formula for Pythagoras' theorem, you can easily calculate the length of one of the shorter sides.

twinkl.com

Pythagoras' Theorem

$a^2 + b^2 = c^2$ longest side

$c^2 - b^2 = a^2$ shorter side

$c^2 - a^2 = b^2$ shorter side

Top Tip:
It doesn't matter which we way round we label a and b, so long as c is always labelled as the hypotenuse (the longest side, always opposite the right angle).

twinkl.com

Pythagoras' Theorem

Let's go back to our question:

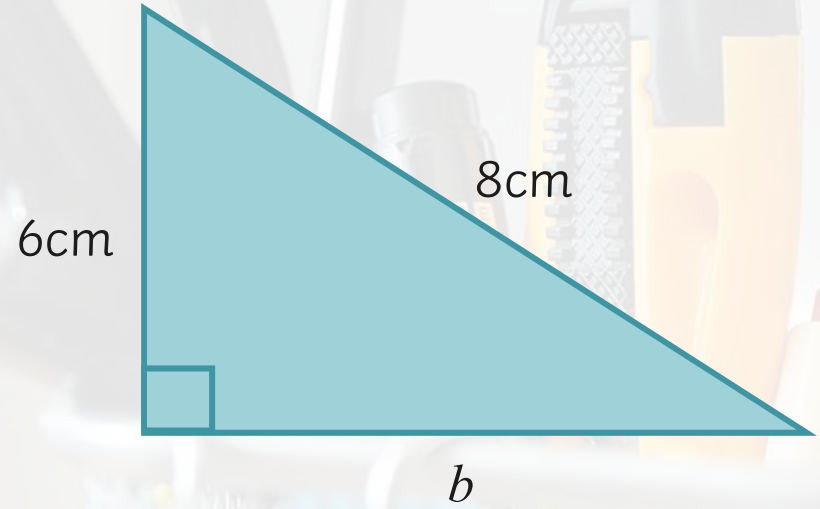

Step 1:
Substitute your values into Pythagoras' formula:

$c^2 - a^2 = b^2$

$8^2 - 6^2 = b^2$

twinkl.com

Pythagoras' Theorem

Let's go back to our question:

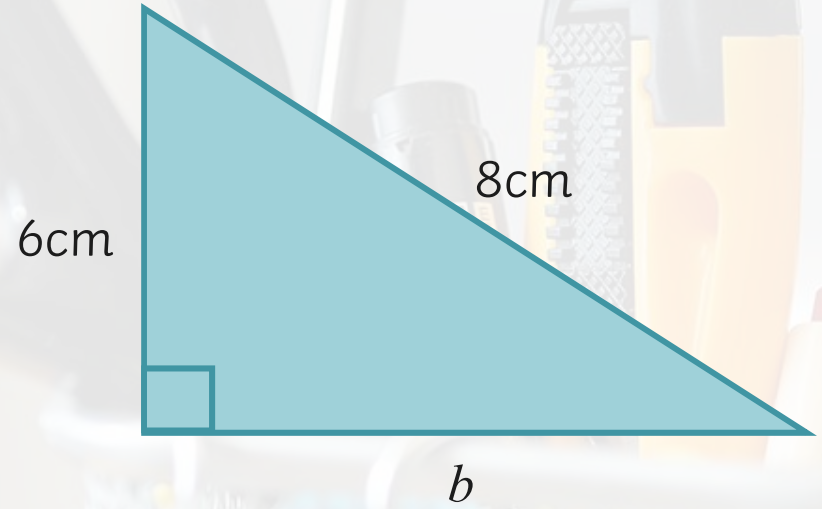

Step 2:
Calculate what you have so far:

$8^2 - 6^2 = b^2$

$64 - 36 = b^2$

$28 = b^2$

twinkl.com

Pythagoras' Theorem

Let's go back to our question:

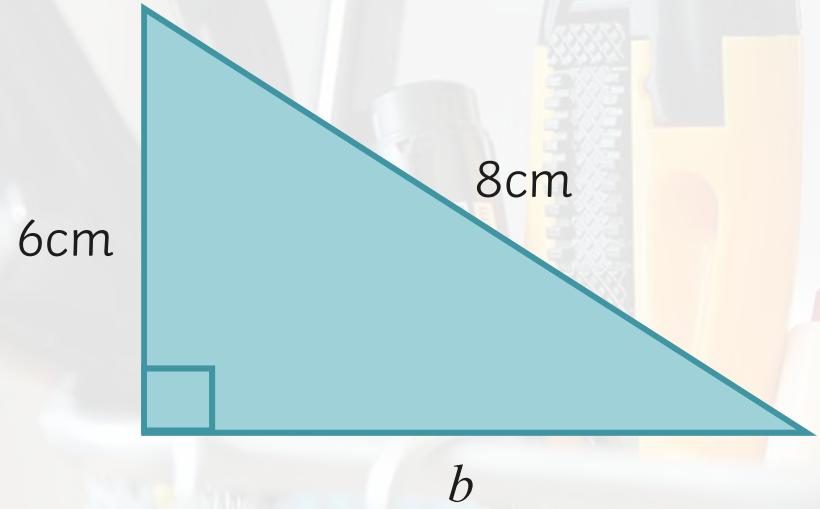

Step 3:
Square root to find b.
$\sqrt{28} = b^2$
$5.291502622 = b$
b = 5.3cm to 1d.p.

twinkl.com

Pythagoras' Theorem

We can summarise our steps:

- **square;**
- **square;**
- **subtract;**
- **square root.**

Let's see how it works...

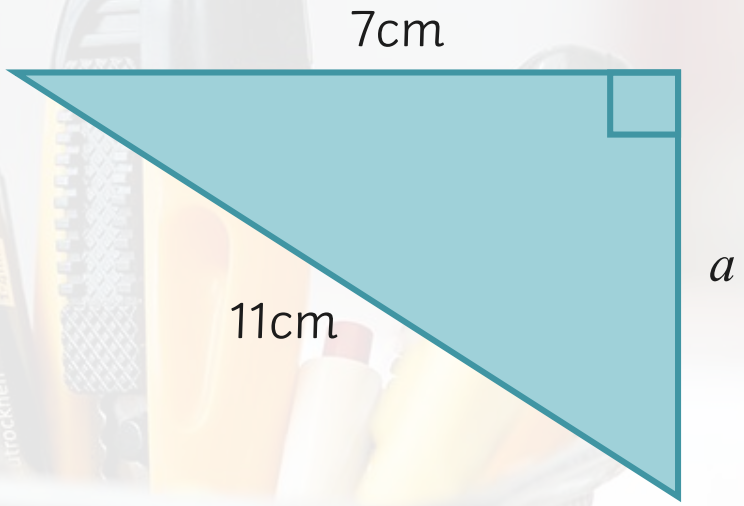

Step 4:
Square root

$\sqrt{72} = 8.485281374$ $a = 8.5\text{cm}$

twinkl.com

Pythagoras' Theorem

Your turn

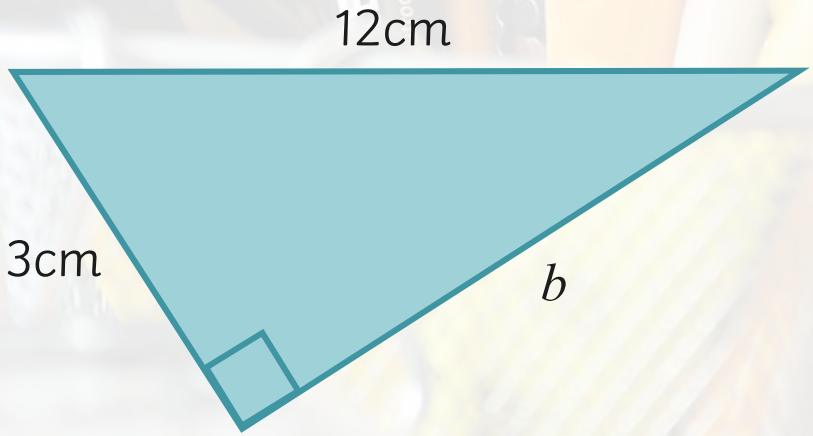

twinkl.com

Pythagoras' Theorem

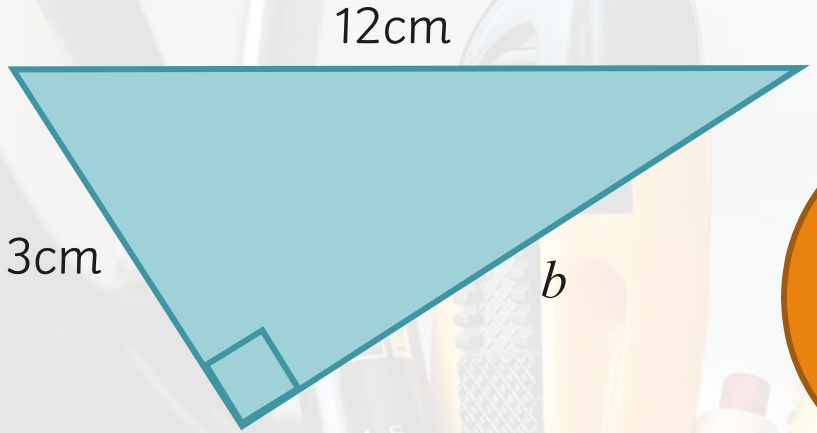

b = **11.6cm** to 1d.p.

Answer

$12^2 - 3^2 = b^2$

$144 - 9 = b^2$

$135 = b^2$

$\sqrt{135} = 11.61895004$

twinkl.com

Your Turn

Shorter Sides of a Right-Angled Triangle

To start:

1. Calculate the answers to the following questions:

   a) 4^2 _____

   b) 12^2 _____

   c) 6^2 _____

   d) 2^2 _____

   e) 3^2 _____

   f) 9^2 _____

   g) 20^2 _____

2. Round the following numbers to the nearest whole number:

   a) 10.546 _____

   b) 20.892 _____

   c) 15.24 _____

   d) 101.721 _____

   e) 9.678 _____

   f) 1.298 _____

   g) 1099.89 _____

3. Calculate the answers to the following questions. Round your answers to the nearest whole number.

   a) √28 _____

   b) √68 _____

   c) √19 _____

   d) √250 _____

   e) √5 _____

   f) √120 _____

   g) √600 _____

Remember:

- square;
- square;
- subtract;
- square root.

For main:

For each triangle, calculate the missing side. Round your answers to the nearest whole number, where necessary. Diagrams **not** drawn to scale.

4.

5.

twinkl.com

Plenary: A Warning!

Making mistakes in maths is normal; it is part of how we learn. Usually a mistake made by one student is made by another.

Can you make a list of all the common errors that someone might make on the questions you did today, then make suggestions of how they could be avoided?

twinkl.com

twinkl
twinkl
Quality Standard
Approved